Western Products, PO Box 245038, Milwaukee, WI 53224-9538 • www.westernplows.com

January 15, 2019
Lit. No. 43776, Rev. 03

PRO-FLO™ 900

Hopper and Drive Components

PRO-FLO™ 900
Low-Profile Tailgate Spreader #91850

Parts List

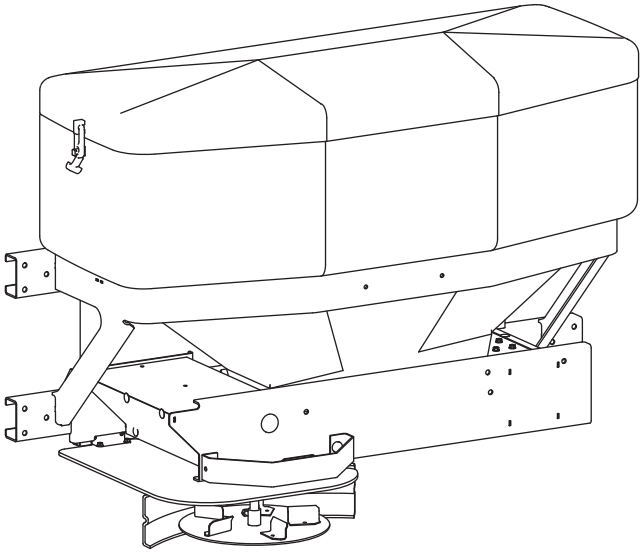

This Parts List is for WESTERN® PRO-FLO 900 Low-Profile Tailgate Spreaders with serial numbers beginning with 150601 through 160729.

A DIVISION OF DOUGLAS DYNAMICS, LLC

HOPPER, VIBRATOR & INVERTED V

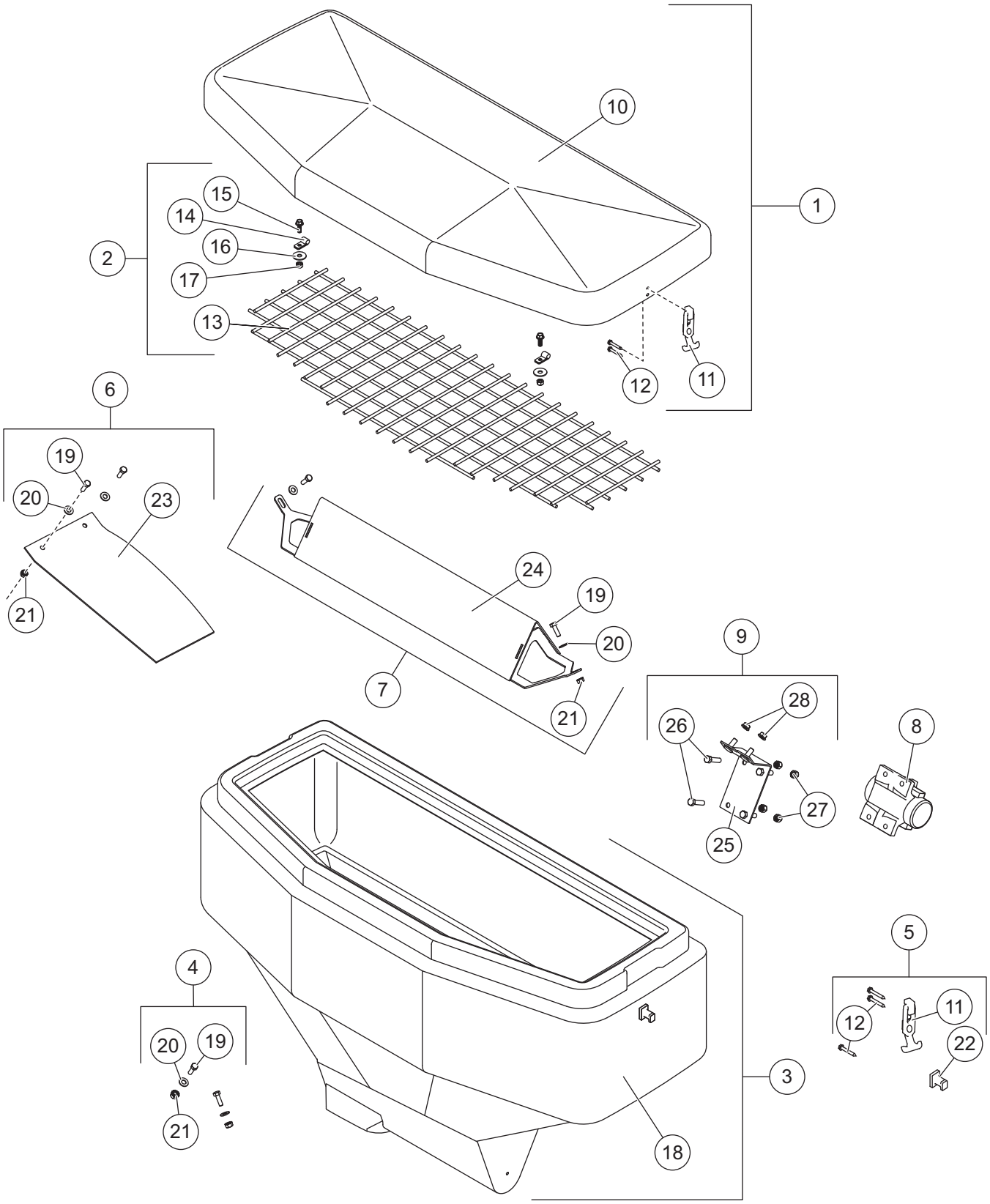

Hopper, Vibrator & Inverted V							
Item	**Part**	**Qty**	**Description**	**Item**	**Part**	**Qty**	**Description**
1	75677	1	Lid Kit	6	75681	1	Baffle Kit
2	75680	1	Top Screen Kit	7	75682	1	Inverted V Kit
3	75908	1	Hopper Kit PRO-FLO 900*	8	75673	1	Vibrator, DC-80
4	75614	1	Hopper Hardware Kit	9	75683	1	Vibrator Mount Bracket Kit
5	75612	1	Hopper Strap Kit				
Item 1			**75677 Lid Kit**				
10		1	Lid Assembly	12		4	#10 x 3/4 Hex Washer-Head Slotted Cap Screw
11		2	Flexible Draw Latch				
Item 2			**75680 Top Screen Kit**				
13		1	Top Screen 40 x 14	16		2	1/4 x 1 Flat Washer SS
14		2	5/16 Clamp	17		2	1/4-20 Hex Locknut SS
15		2	1/4-20 x 3/4 Hex Cap Screw Serrated Flange SS				
Item 3			**75908 Hopper Kit PRO-FLO 900***				
4	75614	1	Hopper Hardware Kit	18		1	Hopper 8.75 ft^3 – Red
Item 4			**75614 Hopper Hardware Kit**				
19		2	5/16-18 x 1-1/4 Hex Cap Screw SS	21		2	5/16-18 Hex Locknut SS
20		2	3/8 Flat Washer SS				
Item 5			**75612 Hopper Strap Kit**				
11		2	Flexible Draw Latch	22		2	Latch Keeper
12		6	#10 x 3/4 Hex Washer-Head Tapping Screw SS				
Item 6			**75681 Baffle Kit**				
19		2	5/16-18 x 1-1/4 Hex Cap Screw SS	21		2	5/16-18 Hex Locknut SS
20		2	3/8 Flat Washer SS	23		1	Material Baffle
Item 7			**75682 Inverted V Kit**				
19		2	5/16-18 x 1-1/4 Hex Cap Screw SS	21		2	5/16-18 Hex Locknut SS
20		2	3/8 Flat Washer SS	24		1	Inverted V
Item 9			**75683 Vibrator Mount Bracket Kit**				
25		1	Mounting Bracket, Inverted V	27		4	3/8-16 Hex Locknut
26		4	3/8-16 x 1-1/2 Hex Cap Screw	28		2	3/8-16 Hex Nut Serrated Flange
SS = Stainless Steel							

* Hopper ships with two latch keepers installed.

FRAME, AUGER & SPINNER GUARD

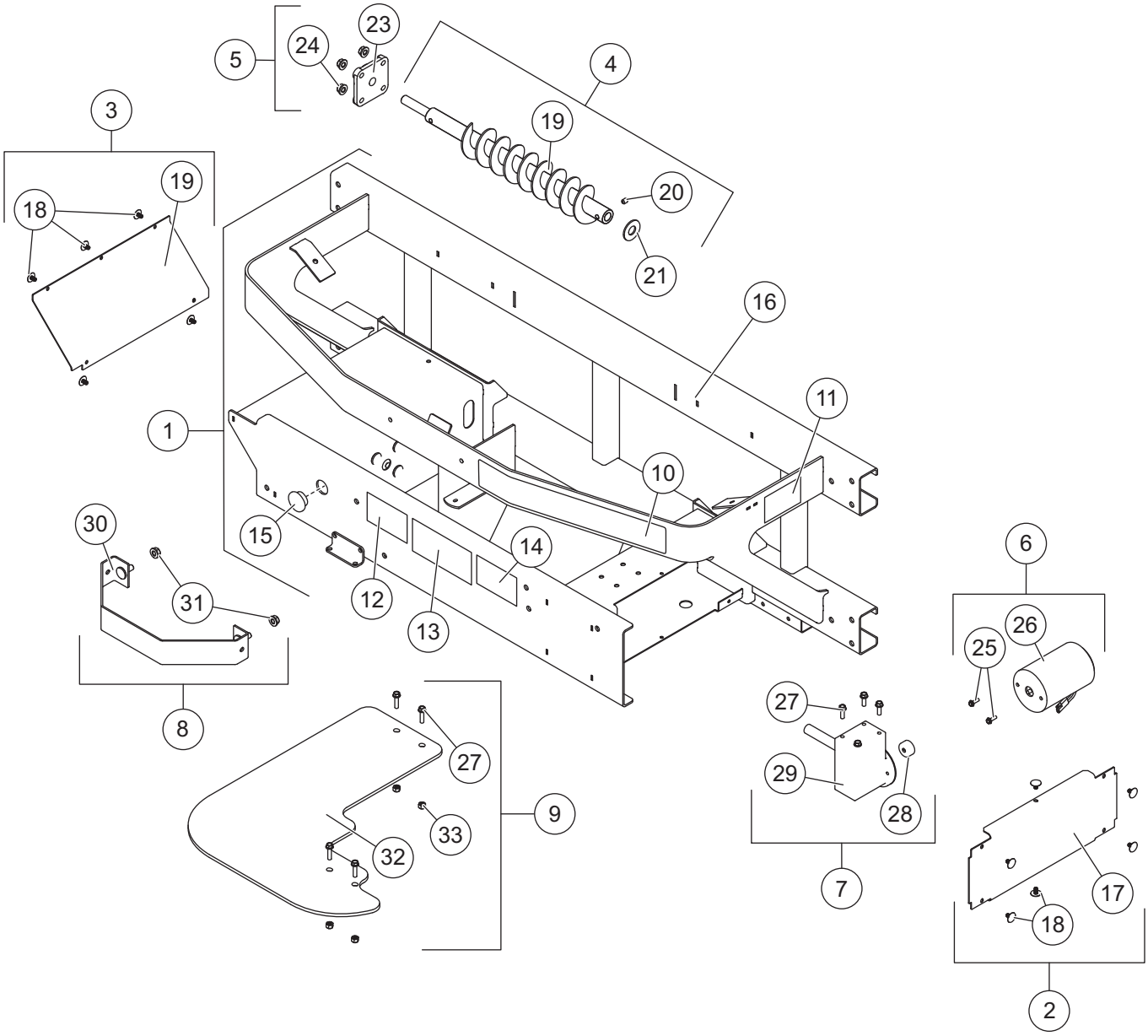

Frame, Auger & Spinner Guard							
Item	**Part**	**Qty**	**Description**	**Item**	**Part**	**Qty**	**Description**
1	75904	1	Frame Kit PRO-FLO 900	8	75688	1	Trim Ring Kit
2	75687	1	Side Cover Kit	9	75690	1	Spinner Guard Kit
3	75560	1	Spinner Drive Cover Kit	10	42527	1	Label – Identity, PRO-FLO 900
4	75679	1	Auger Kit	11	75694	1	Label – Warning, Never Swing Spreader
5	75660	1	Bearing Kit	12	75621	1	Label – Warning, Hands and Feet
6	75901	1	Motor Kit	13	75669	1	Label – Warning, Rotating Auger
7	75692	1	Auger Transmission Kit	14	75623	1	Label – Warning, Read Manual
Item 1			**75904 Frame Kit PRO-FLO 900**				
10	42527	1	Label – Identity, PRO-FLO 900	14	75623	1	Label – Warning, Read Manual
11	75694	1	Label – Warning, Never Swing Spreader	15	75689	1	Bearing Access Cover
12	75621	1	Label – Warning, Hands and Feet	16		1	Main Frame
13	75669	1	Label – Warning, Rotating Auger				
Item 2			**75687 Side Cover Kit**				
17		1	Drive Cover	18	79334	6	1/4 x 3/4 x 1/2 Push Retainer Nylon
Item 3			**75560 Spinner Drive Cover Kit**				
18	79334	6	1/4 x 3/4 x 1/2 Push Retainer Nylon	19		1	Spinner Drive Cover
Item 4			**75679 Auger Kit**				
20		1	2-5/8 x 20 x 1-3/8 Auger	22		1	5/16-18 x 3/8 Socket Head Set Screw
21		1	5/8 Flat Washer Nylon				
Item 5			**75660 Bearing Kit**				
23	68662	1	5/8 Bearing 4-Bolt Flange	24		4	3/8-16 Serrated Flange Nut
Item 6			**75901 Motor Kit**				
25		2	#10-32 x 5/8 Hex Cap Screw Serrated Flange w/Patch	26		1	Motor 12V DC, 3 x 3.8
Item 7			**75692 Auger Transmission Kit**				
27		4	1/4-20 x 3/4 Hex Cap Screw Serrated Flange SS	28	79332	1	Motor Drive Coupler
				29		1	Transmission 20:1 Worm Gear
Item 8			**75688 Trim Ring Kit**				
30		1	Trim Ring	31		2	3/8-16 Hex Nut Serrated Flange
Item 9			**75690 Spinner Guard Kit**				
27		4	1/4-20 x 3/4 Hex Cap Screw Serrated Flange SS	32		1	Spinner Guard
				33		4	1/4-20 Locknut
SS = Stainless Steel							

SPINNER, CHUTE & DEFLECTOR

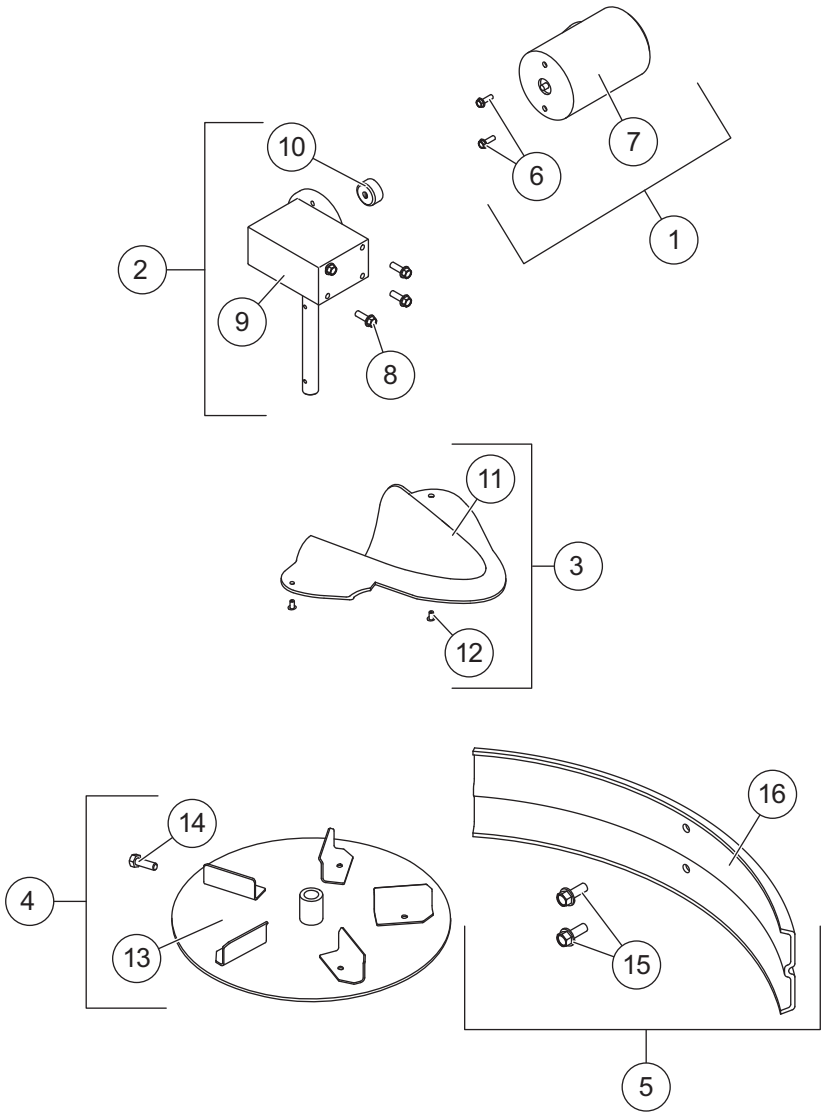

Spinner, Chute & Deflector							
Item	**Part**	**Qty**	**Description**	**Item**	**Part**	**Qty**	**Description**
1	75901	1	Motor Kit	4	75685	1	Spinner Kit
2	75686	1	Spinner Transmission Kit	5	75665	1	Deflector Kit
3	75691	1	Material Chute Kit				
Item 1			**75901 Motor Kit**				
6		2	#10-32 x 5/8 Hex Cap Screw Serrated Flange w/Patch	7		1	Motor 12V DC, 3 x 3.8
Item 2			**75686 Spinner Transmission Kit**				
8		2	1/4-20 x 3/4 Hex Cap Screw Serrated Flange SS	9		1	Transmission 8:1 Worm Gear
				10	79332	1	Motor Drive Coupler
Item 3			**75691 Material Chute Kit**				
11		1	Material Chute	12		2	3/16 x 0.354 Rivet – Black Aluminum
Item 4			**75685 Spinner Kit**				
13		1	Spinner 12" Steel	14		1	5/16-18 x 1/2 Hex Cap Screw
Item 5			**75665 Deflector Kit**				
15		2	3/8-16 x 1 Hex Cap Screw Serrated Flange Type F	16		1	Deflector
SS = Stainless Steel							

ELECTRICAL COMPONENTS

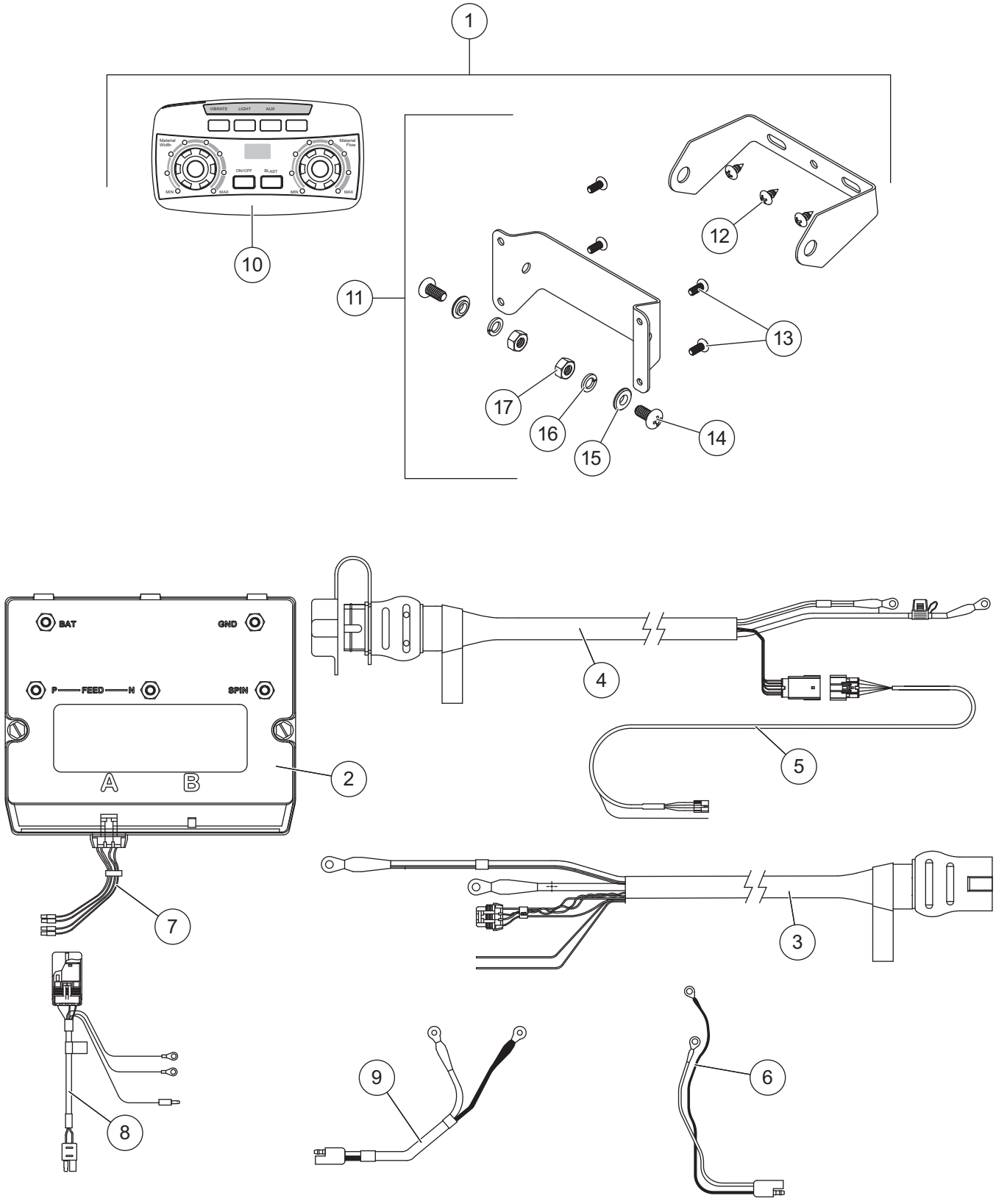

Electrical Components							
Item	**Part**	**Qty**	**Description**	**Item**	**Part**	**Qty**	**Description**
1	52450	1	Spreader Control Kit	6	78399	1	Spinner Motor Harness Rev. Pin-Out
2	52375	1	Spreader Module, 5-Post	7	69893	1	10-Pin Connector w/4 Wires
3	72092	1	Spreader Harness*	8	78382	1	Vibrator Harness Assembly
4	72090	1	Vehicle Harness*	9	78397	1	Auger Motor Harness
5	69902	1	Vehicle Control Harness				
Item 1			**52450 Spreader Control Kit**				
10	52452	1	Spreader Control	14		2	1/4-20 x 1/2 Pan Head Machine Screw SS – Black
11	52345	1	Control Bracket Kit				
12		3	#10 x 3/8 Pan Head Tapping Screw SS	15		2	1/4 Shoulder Washer SS – Black
				16		2	1/4 Lock Washer SS
13		4	#8 x 3/8 Pan Head Machine Screw	17		2	1/4-20 Hex Nut G5 – Black
SS = Stainless Steel				G = Grade			

* For spreaders with 8-pin harnesses, order the 52348 harness kit (contains both spreader and vehicle harnesses).

Western Products
PO Box 245038
Milwaukee, WI 53224-9538
www.westernplows.com

A DIVISION OF DOUGLAS DYNAMICS, LLC

Copyright © 2019 Douglas Dynamics, LLC. All rights reserved. This material may not be reproduced or copied, in whole or in part, in any printed, mechanical, electronic, film, or other distribution and storage media, without the written consent of Western Products. Authorization to photocopy items for internal or personal use by Western Products outlets or spreader owner is granted.

Western Products reserves the right under its product improvement policy to change construction or design details and furnish equipment when so altered without reference to illustrations or specifications used. Western Products or the vehicle manufacturer may require or recommend optional equipment for spreaders. Do not exceed vehicle ratings with a spreader. Western Products offers a limited warranty for all spreaders and accessories. See separately printed page for this important information. The following are registered (®) or unregistered (™) trademarks of Douglas Dynamics, LLC: PRO-FLO™ 900, WESTERN®.

Printed in U.S.A.